A 3

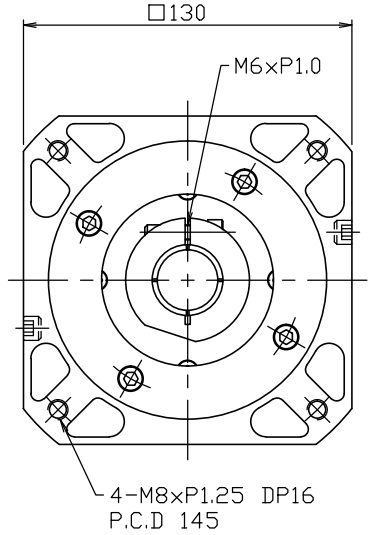

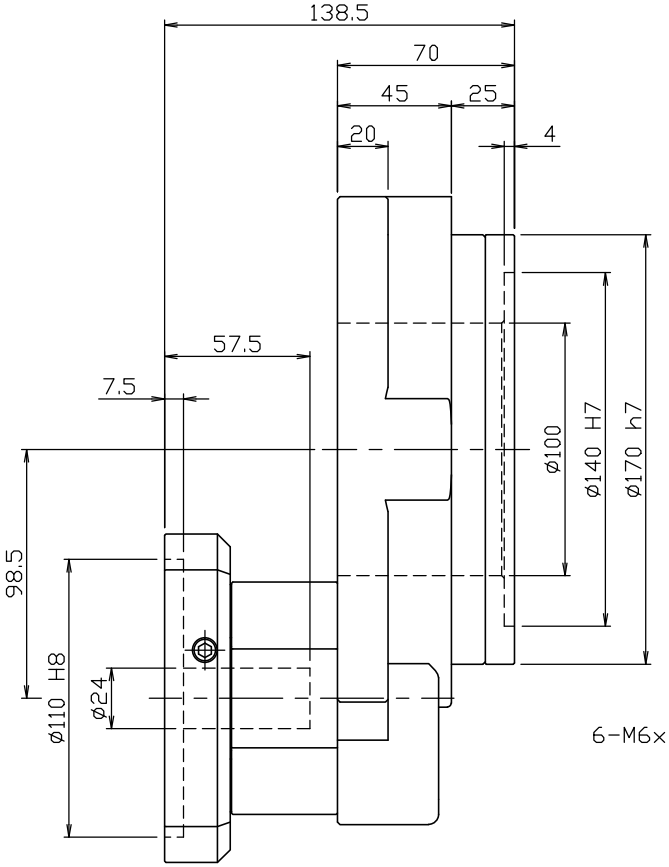

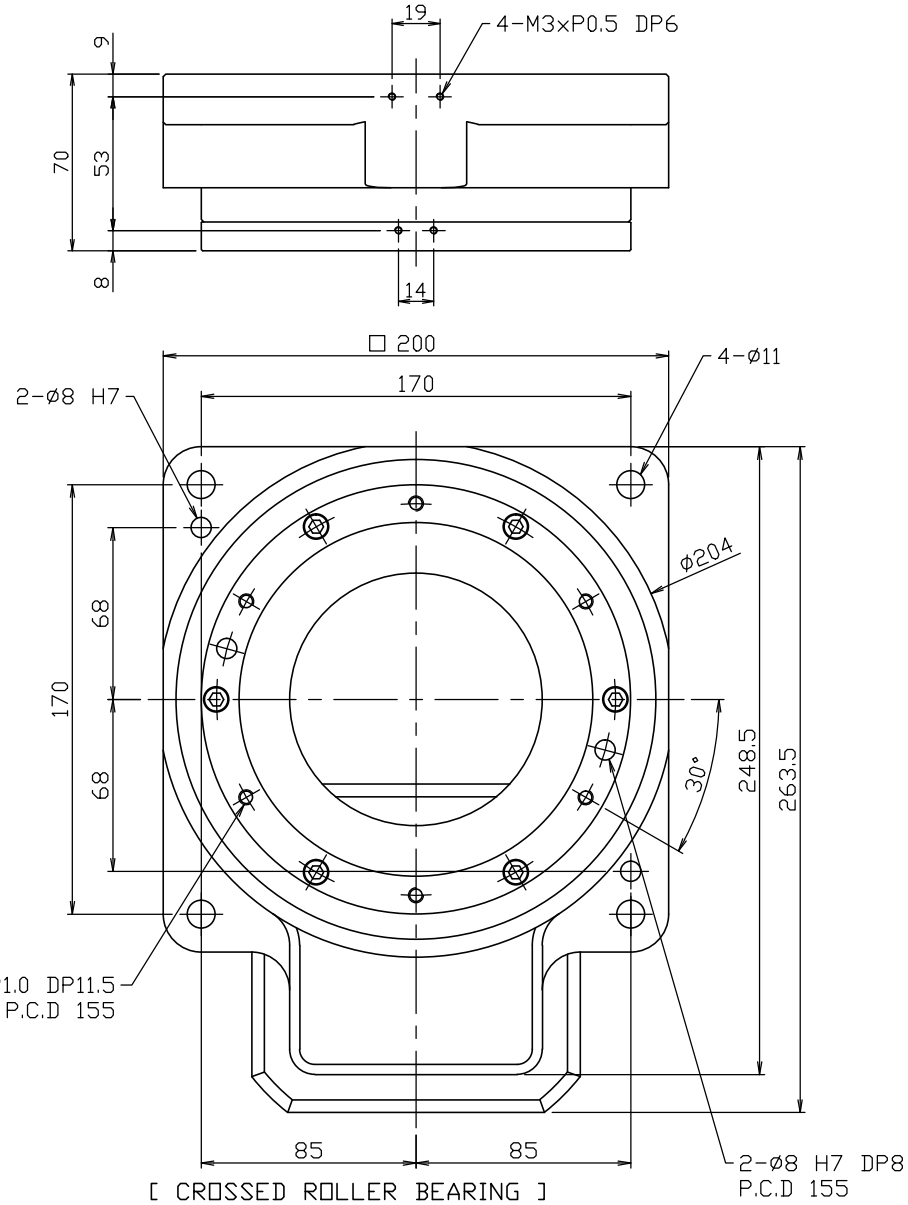

[CROSSED ROLLER BEARING]

No	DRAWING NUMBER		DESCRIPTION		MATERIAL	Q'TY	REMARK
3RD ANGLE	UNIT	mm	DATE	2018. 10. 15	TITLE	PLANETARY GEARBOX	
	SCALE	1 / 2	DESIGN	H.Y LEE	DWG. No		
A T G			CHECK		MODEL	KGT-200H-1 (R=10,18)	
			APPROVE		PROJECT		