A 3

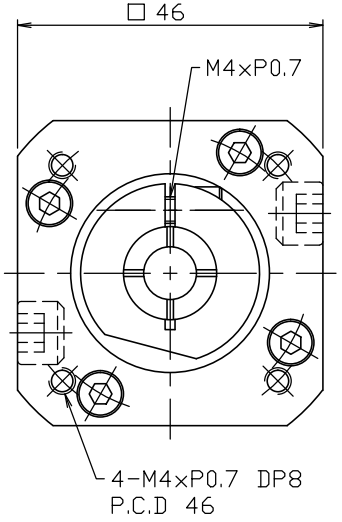

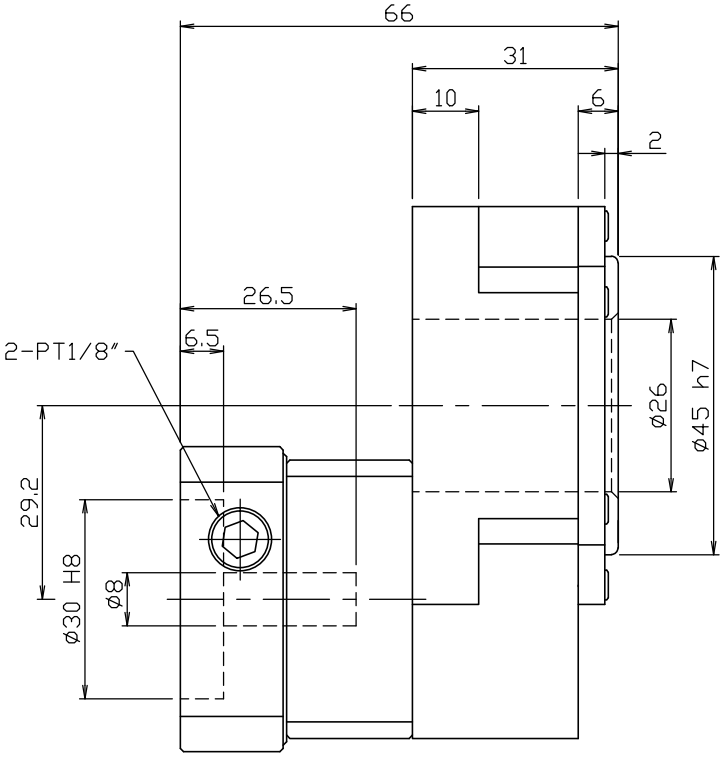

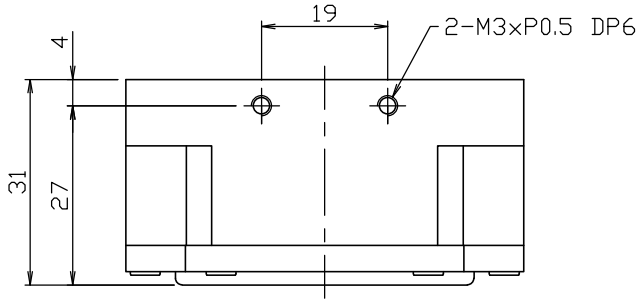

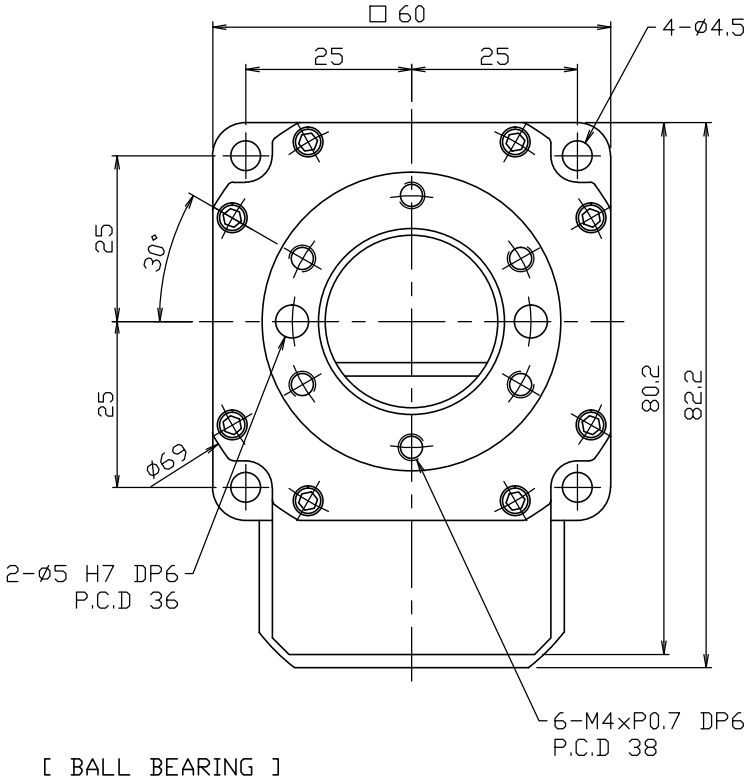

[BALL BEARING]

No	DRAWING NUMBER		DESCRIPTION		MATERIAL	Q'TY	REMARK
3RD ANGLE	UNIT	mm	DATE	2018. 10. 15	TITLE	PLANETARY GEARBOX	
	SCALE	1 / 1	DESIGN	H.Y LEE	DWG. No		
A T G			CHECK		MODEL	KGT-60H-1 (R=10,18)	
			APPROVE		PROJECT		