A 3

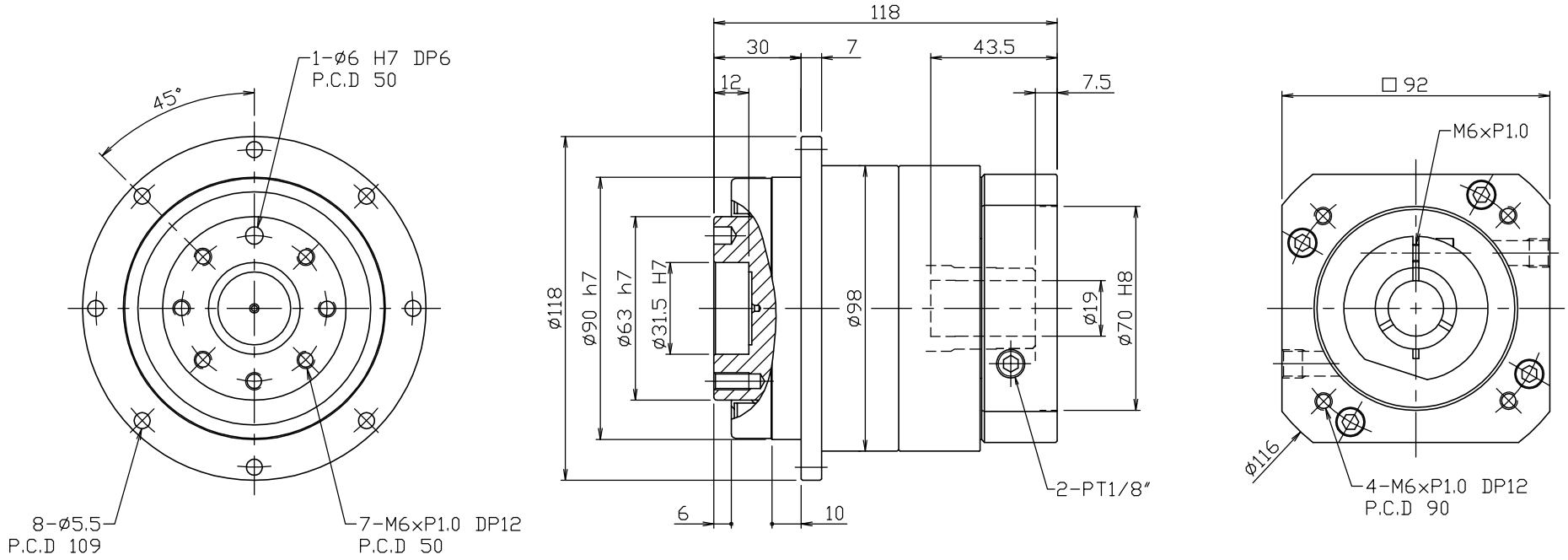

No	DRAWING NUMBER		DESCRIPTION		MATERIAL	Q'TY	REMARK
3RD ANGLE	UNIT	mm	DATE	2013. 07. 01	TITLE	PLANETARY GEARBOX	
	SCALE	1 /1.5	DESIGN	H.Y LEE	DWG. No		
A T G			CHECK		MODEL	KSD-90-1 (New)	
			APPROVE		PROJECT		