A 3

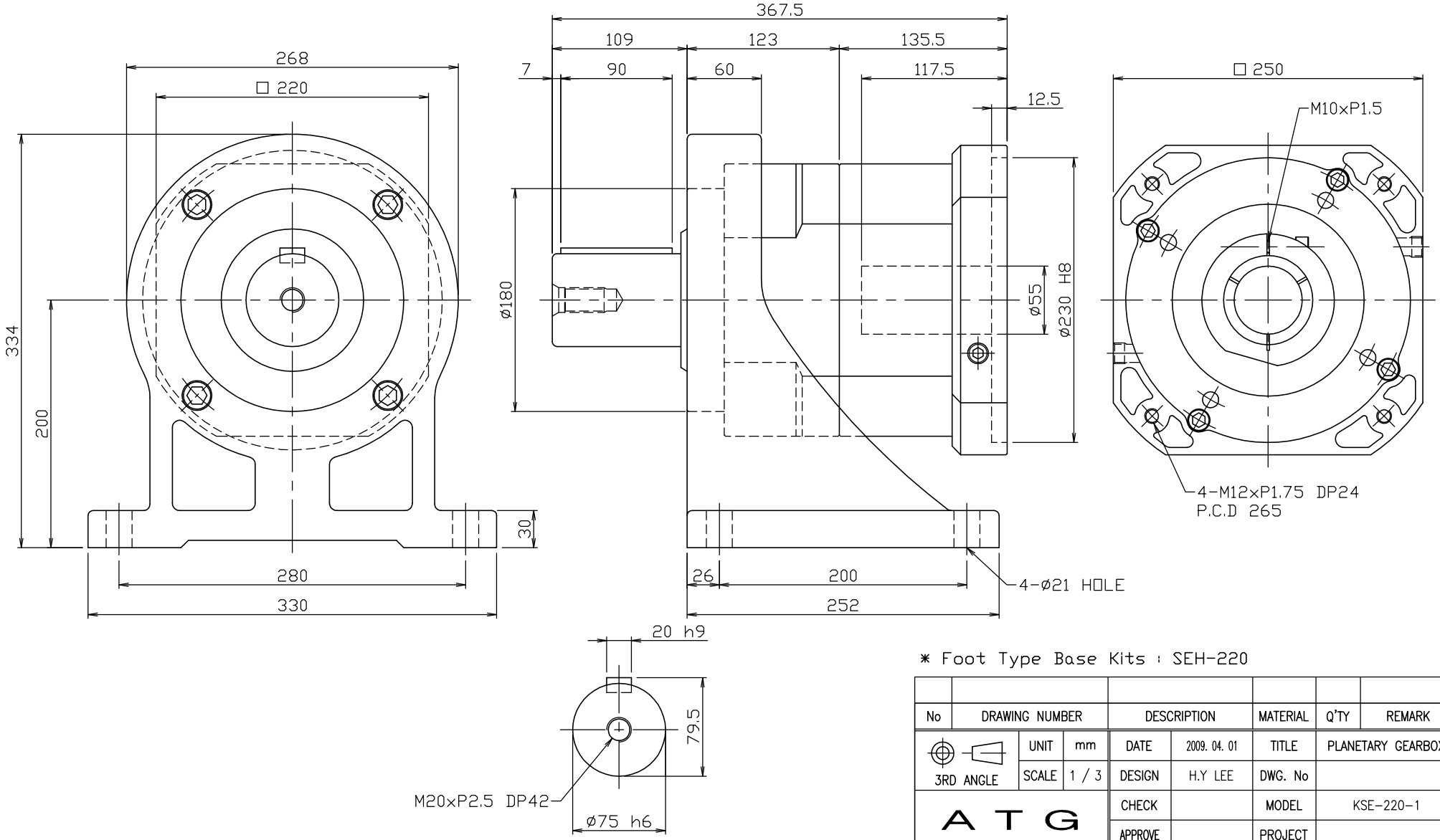

* Foot Type Base Kits : SEH-220

No	DRAWING NUMBER		DESCRIPTION		MATERIAL	Q'TY	REMARK
3RD ANGLE	UNIT	mm	DATE	2009. 04. 01	TITLE	PLANETARY GEARBOX	
	SCALE	1 / 3	DESIGN	H.Y LEE	DWG. No		
A T G			CHECK		MODEL	KSE-220-1	
			APPROVE		PROJECT		