A 3

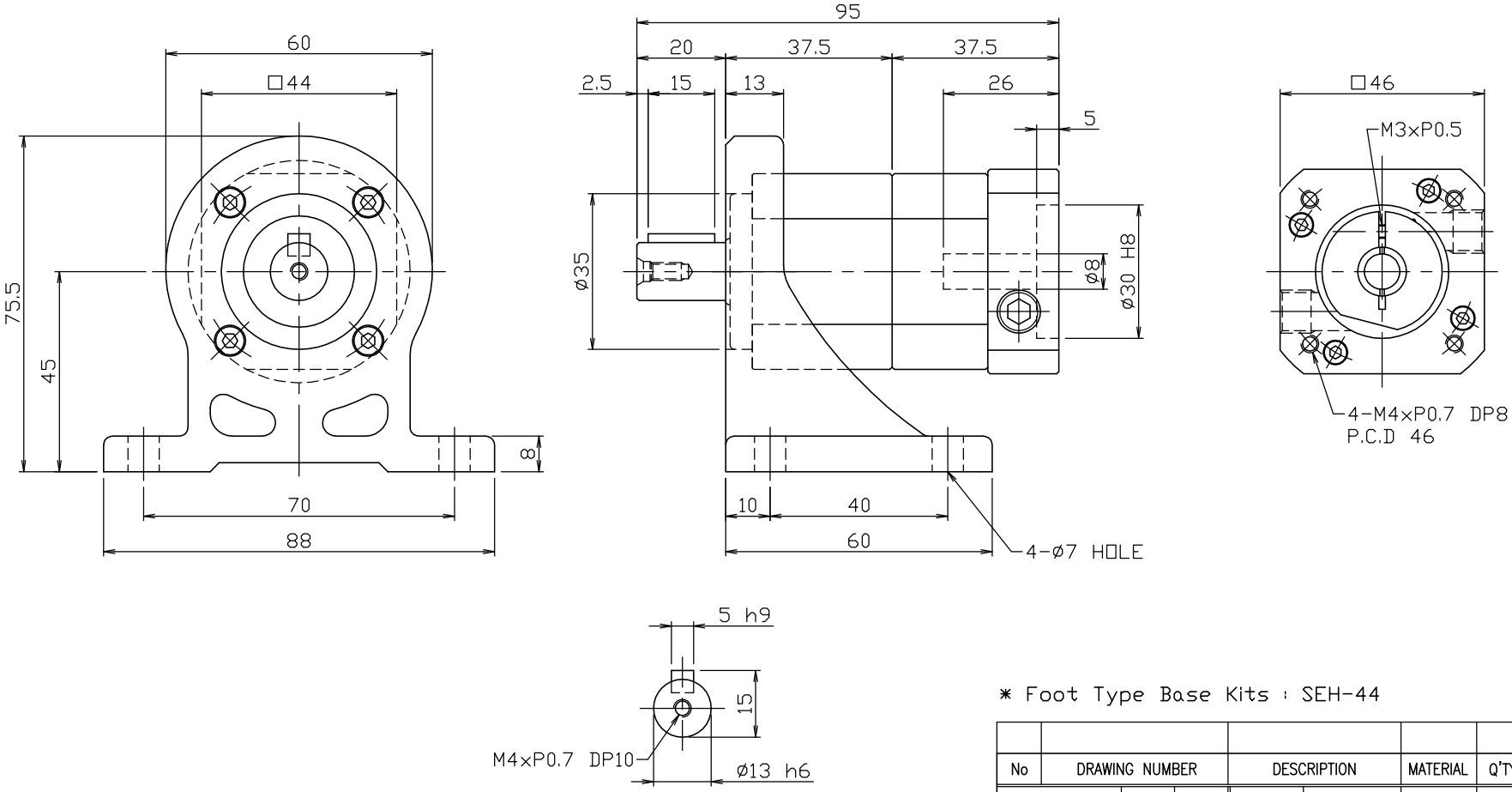

* Foot Type Base Kits : SEH-44

No	DRAWING NUMBER			DESCRIPTION		MATERIAL	Q'TY	REMARK
3RD ANGLE		UNIT	mm	DATE	2009. 04. 01	TITLE	PLANETARY GEARBOX	
		SCALE	1 / 1	DESIGN	H.Y LEE	DWG. No		
A T G				CHECK		MODEL	KSE-44-1	
				APPROVE		PROJECT		