A 3

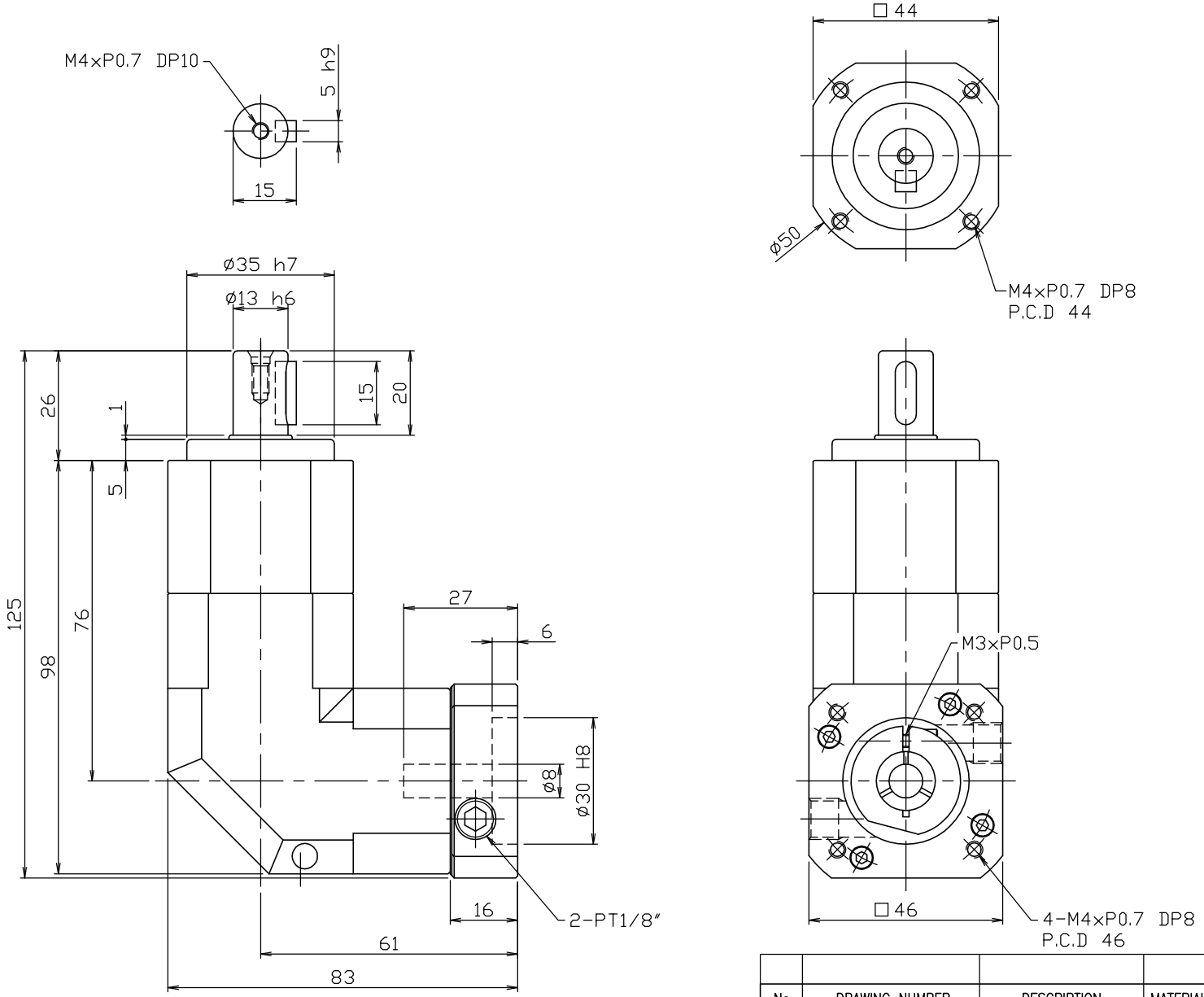

No	DRAWING NUMBER		DESCRIPTION		MATERIAL	Q'TY	REMARK
3RD ANGLE	UNIT	mm	DATE	2013. 05. 01	TITLE	PLANETARY GEARBOX	
	SCALE	1 / 1	DESIGN	H.Y LEE	DWG. No		
A T G			CHECK		MODEL	KSEL-44-1	
			APPROVE		PROJECT		